SEATTLE GRAY
DUAL-POWER RECLINING SECTIONAL

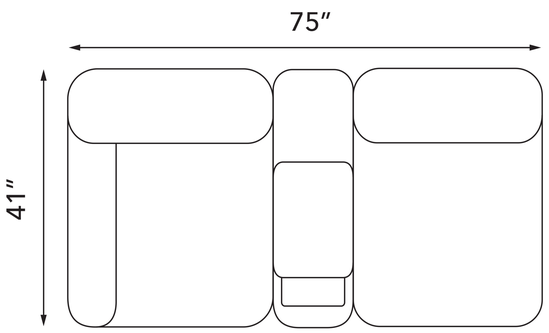

SEA800LAF
Left Arm Facing Dual-Power Reclining
Loveseat w/ Wireless Charging Console, Gray

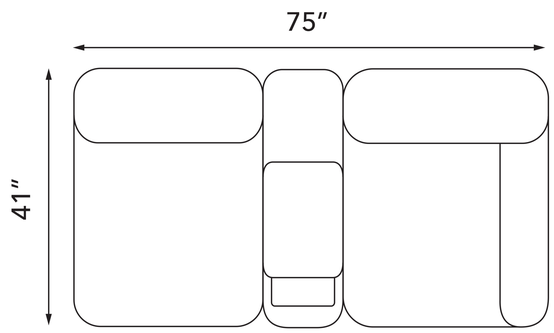

SEA800RAF
Right Arm Facing Dual-Power Reclining
Loveseat w/ Wireless Charging Console, Gray

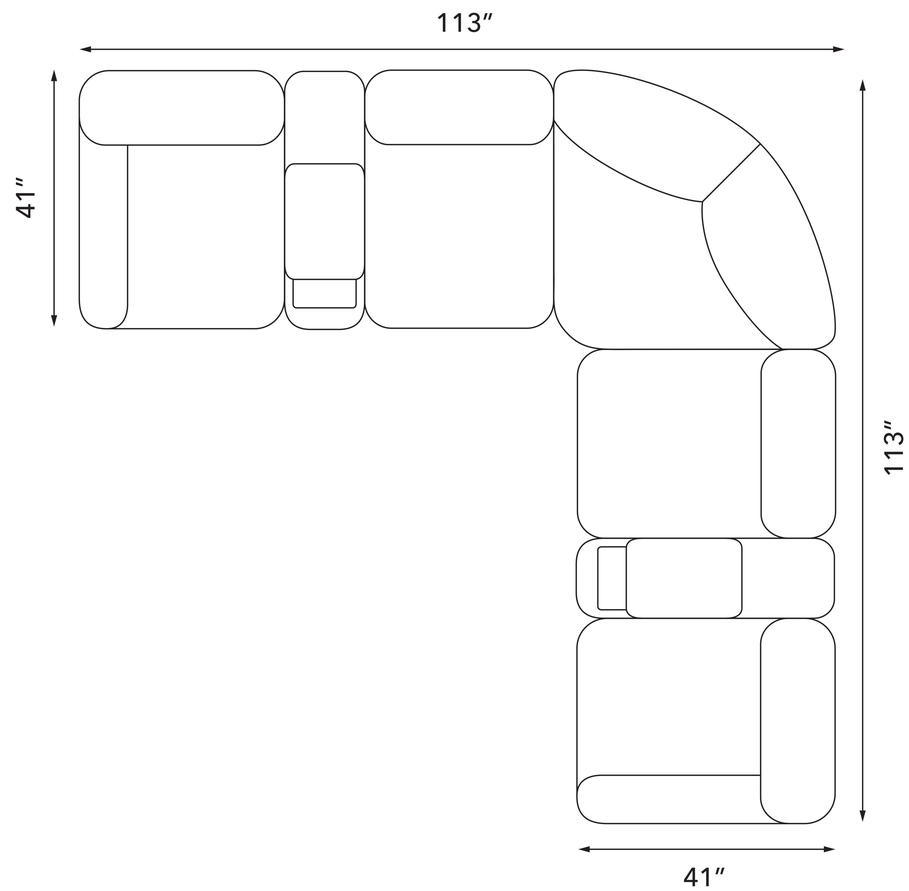

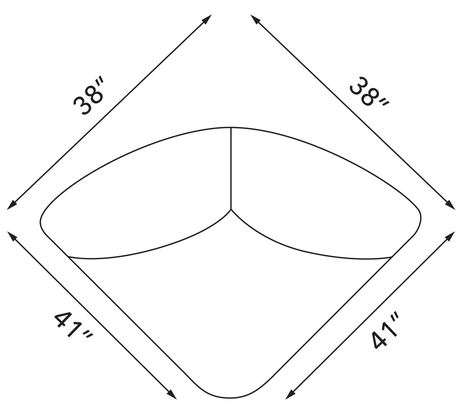

SEA800W
Wedge, Gray

STEVE SILVER
FURNITURE