DESIGN YOUR OWN SPACE

PLAZA BROWN
POWER RECLINING SECTIONAL

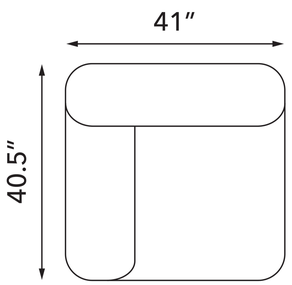

LZ950LAPR
Left Arm Facing
Power Recliner

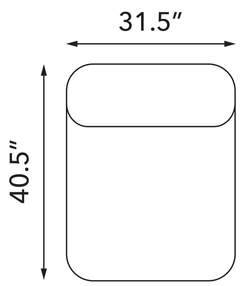

LZ950APR
Armless Power
Recliner

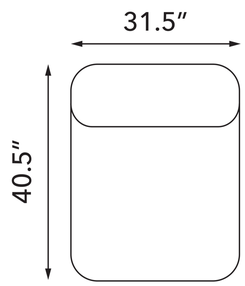

LZ950AC
Armless Chair

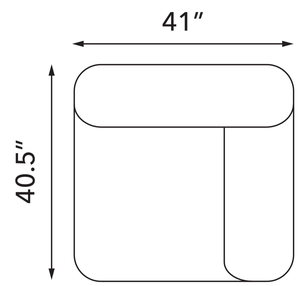

LZ950RAPR
Right Arm Facing
Power Recliner

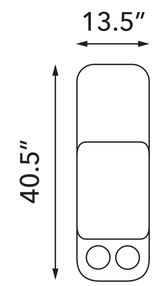

LZ950C
Console

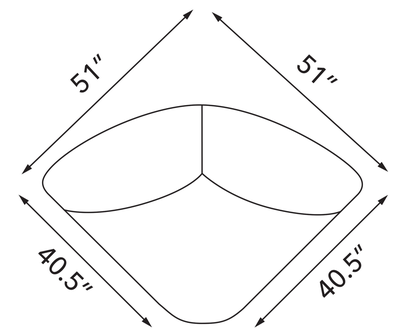

LZ950W
Wedge

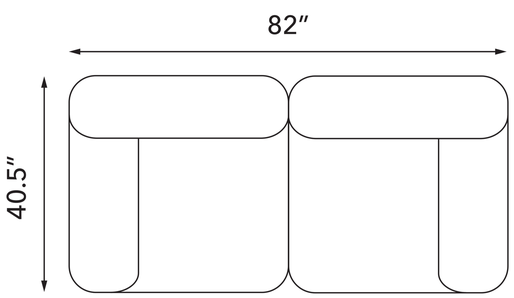

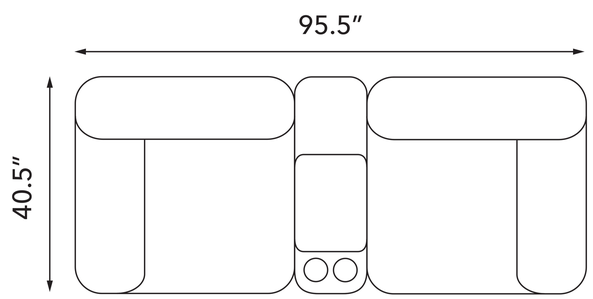

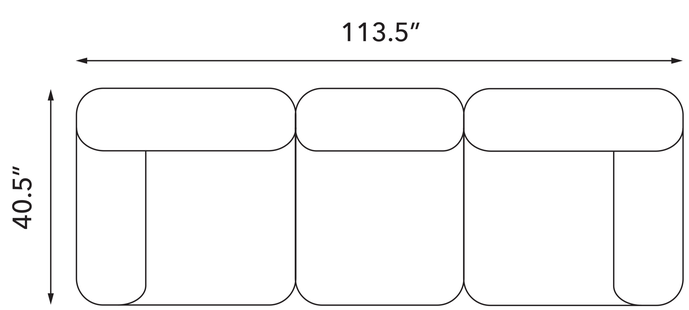

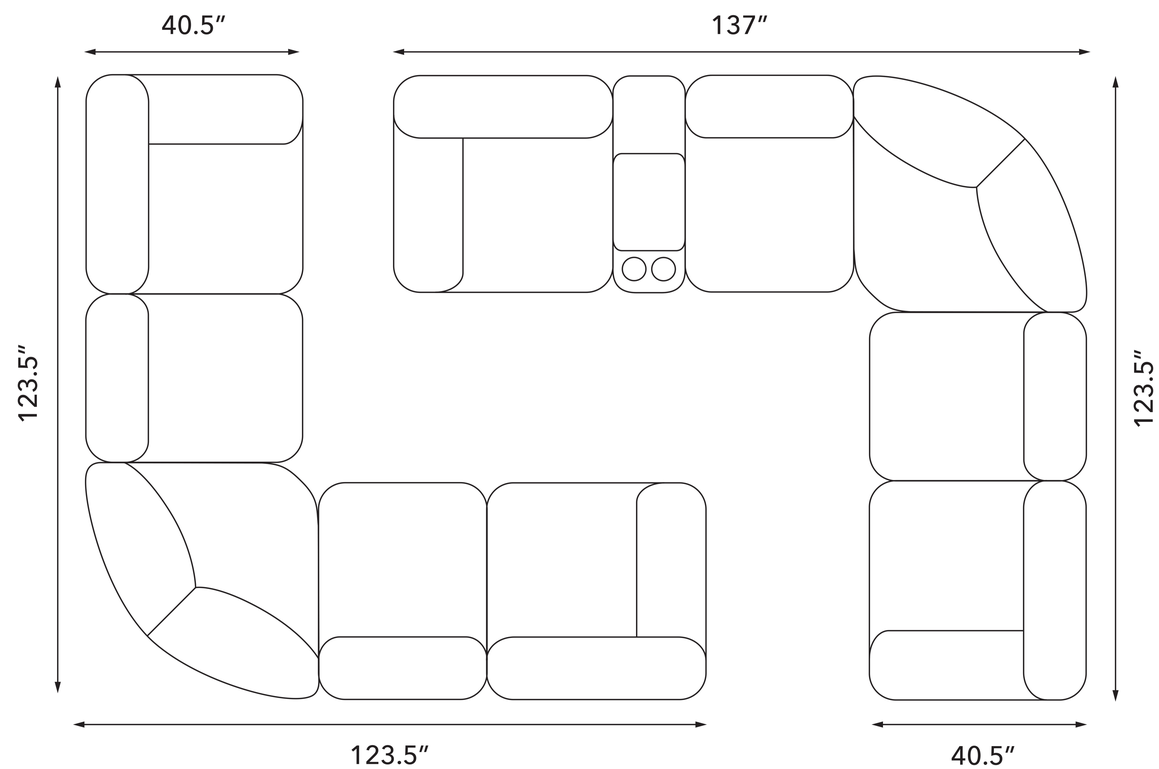

STEVE SILVER
FURNITURE