DESIGN YOUR OWN SPACE

PARK CITY GRAY

DUAL-POWER RECLINING SECTIONAL

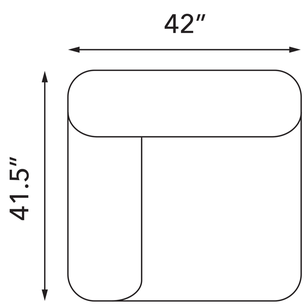

AR70172LRP
Left Arm Facing
Dual-Power Recliner, Gray

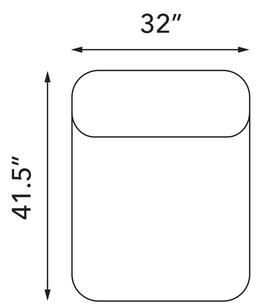

AR70172ARP
Armless Dual-Power
Recliner, Gray

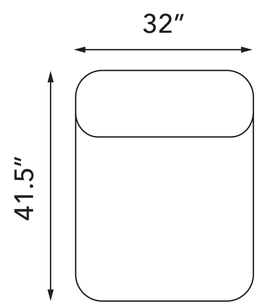

AR70172ACP
Armless Chair, Gray

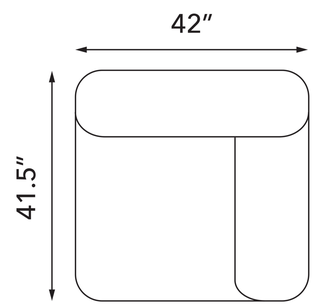

AR70172RRP
Right Arm Facing
Dual-Power Recliner, Gray

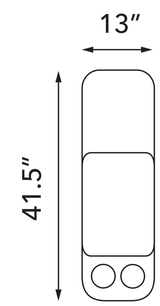

AR70172CEP
Console, Gray

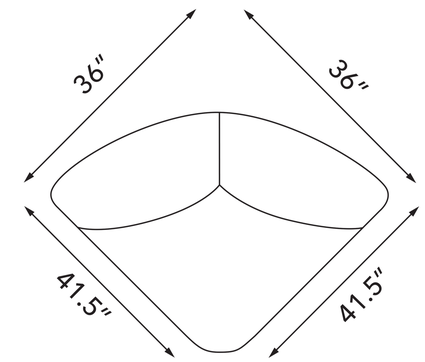

AR70172WP
Wedge, Gray

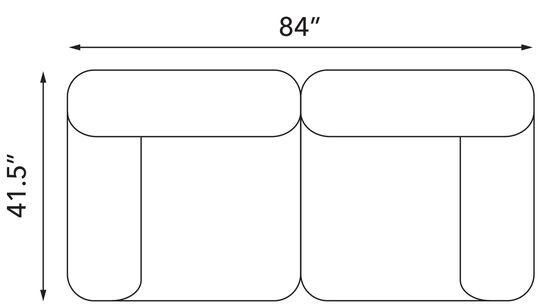

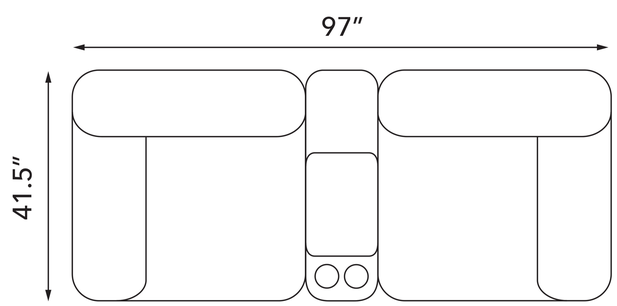

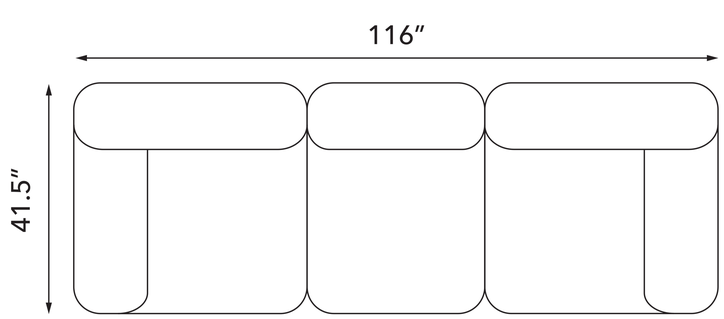

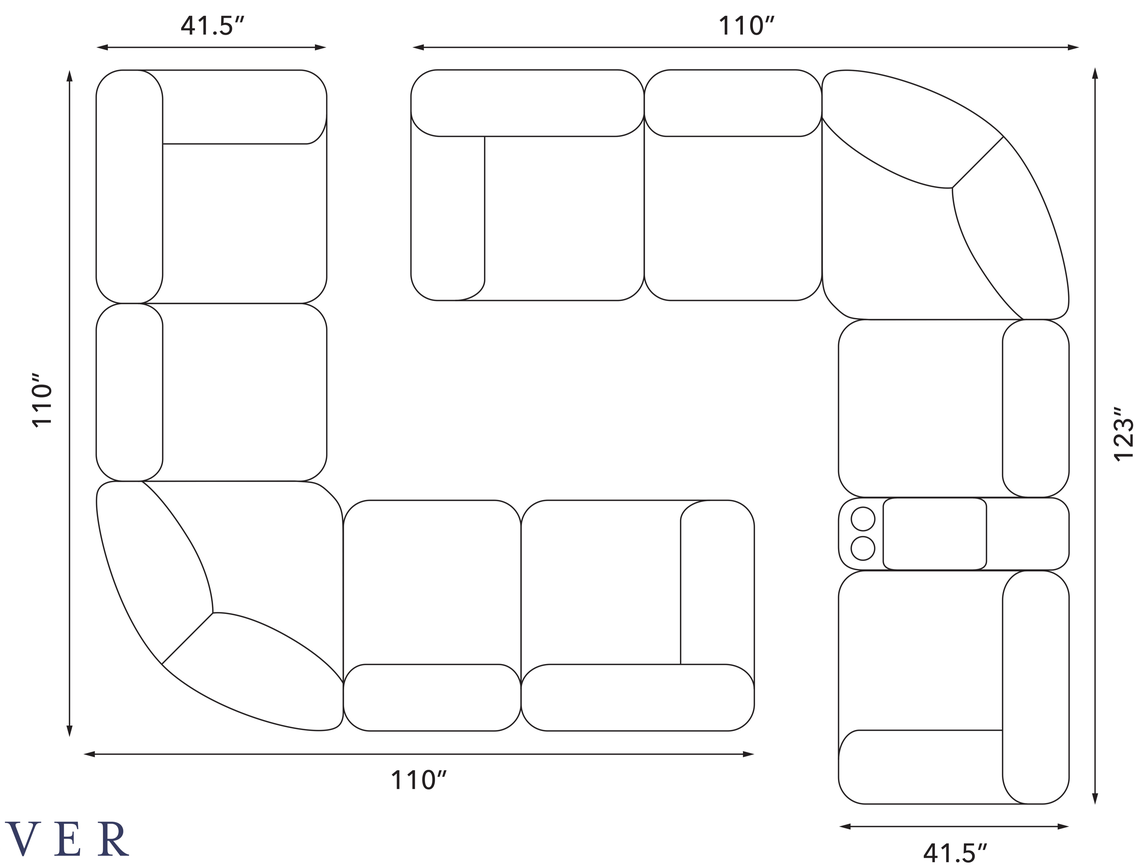

STEVE SILVER
FURNITURE