DESIGN YOUR OWN SPACE

OGDEN GRANITE

POWER RECLINING SECTIONAL

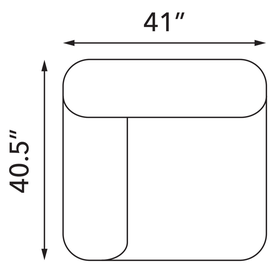

OG5150LRG
Left Arm Facing
Power Recliner, Granite

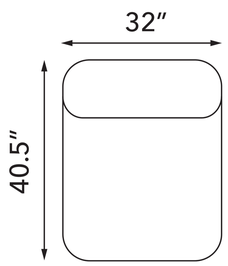

OG5150ARG
Armless Power
Recliner, Granite

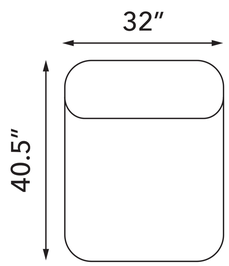

OG5150ACG
Armless Chair, Granite

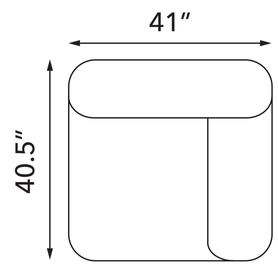

OG5150RRG
Right Arm Facing
Power Recliner, Granite

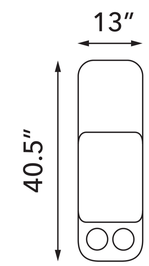

OG5150CG
Console, Granite

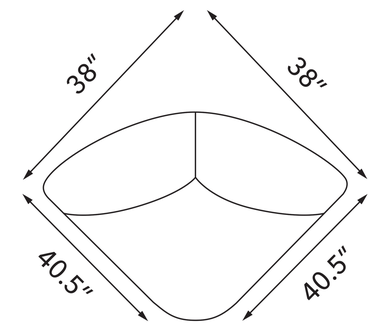

OG5150WG
Wedge, Granite

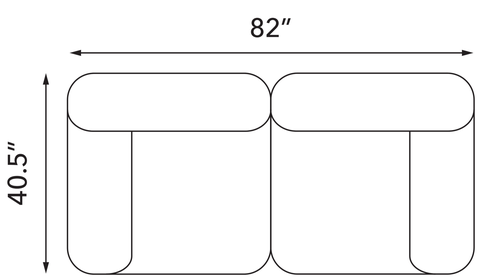

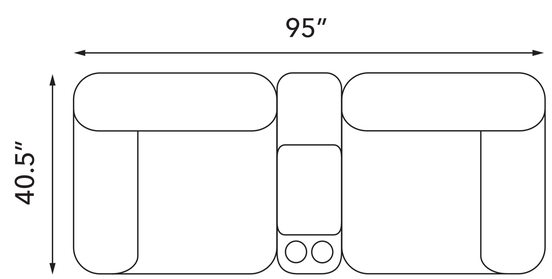

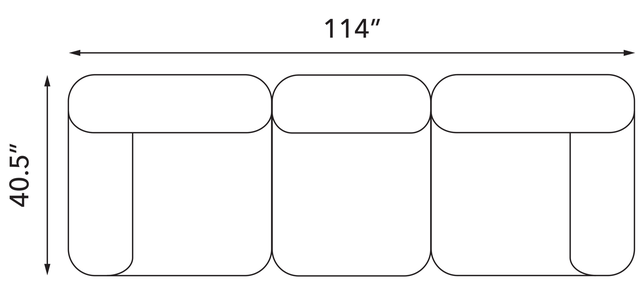

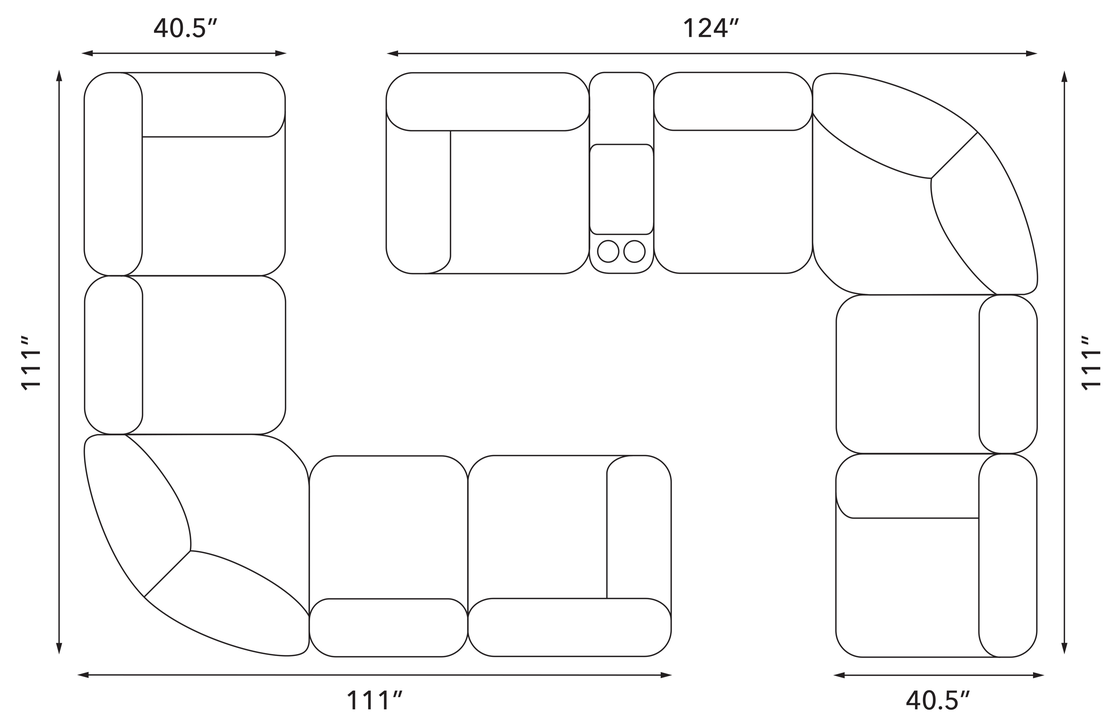

STEVE SILVER
FURNITURE