DESIGN YOUR OWN SPACE

ISLA GREY

DUAL-POWER RECLINING SECTIONAL

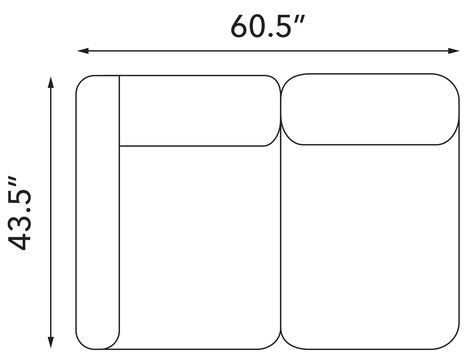

IL950LAFL
Left Arm Facing
Dual-Power Loveseat Recliner, Grey

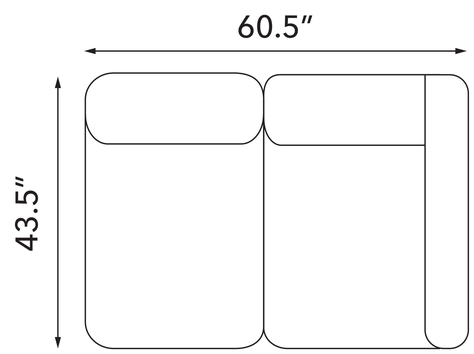

IL950RAFL
Right Arm Facing
Dual-Power Loveseat, Grey

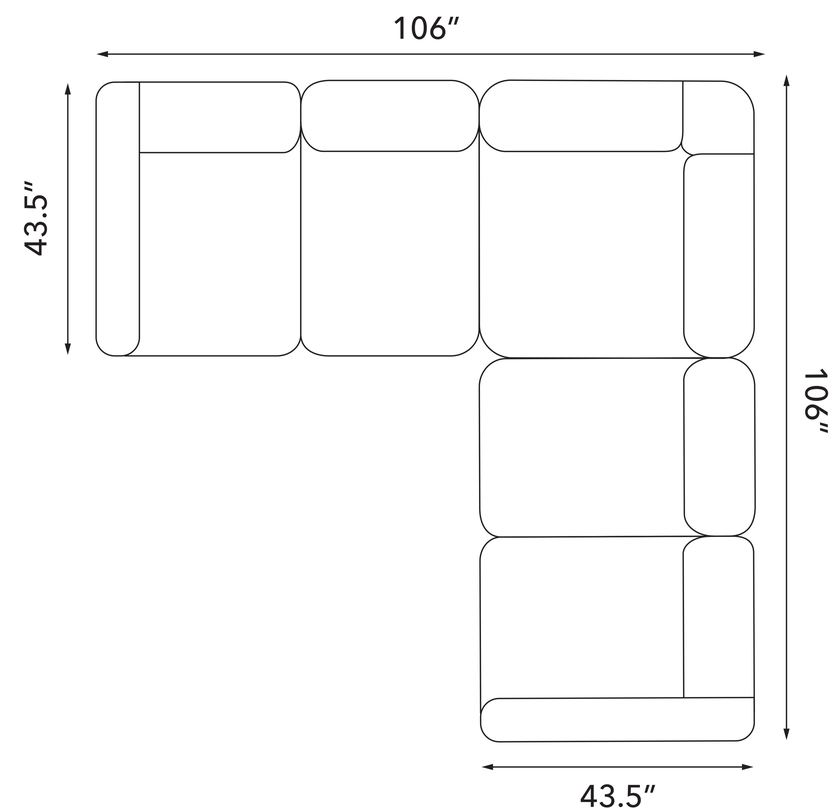

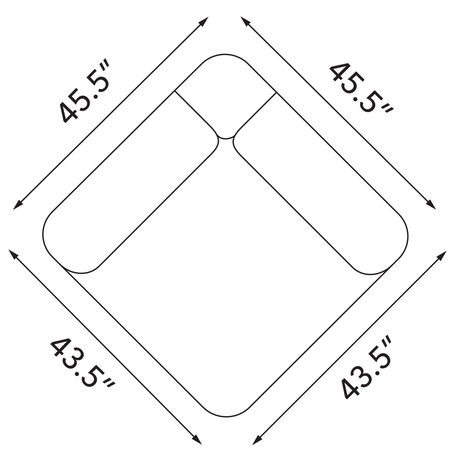

IL950W
Wedge w/ Storage, Grey

STEVE SILVER
FURNITURE