DESIGN YOUR OWN SPACE

CYPRUS TWO-TONE GREY

MANUAL RECLINING SECTIONAL

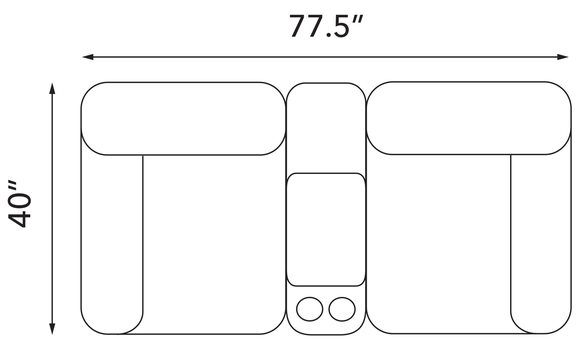

CY950CL
Recliner Console Loveseat,
Two-Tone Grey

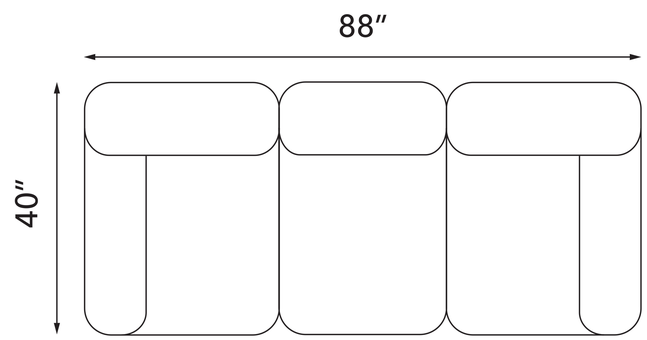

CY950S
Recliner Sofa,
Two-Tone Grey

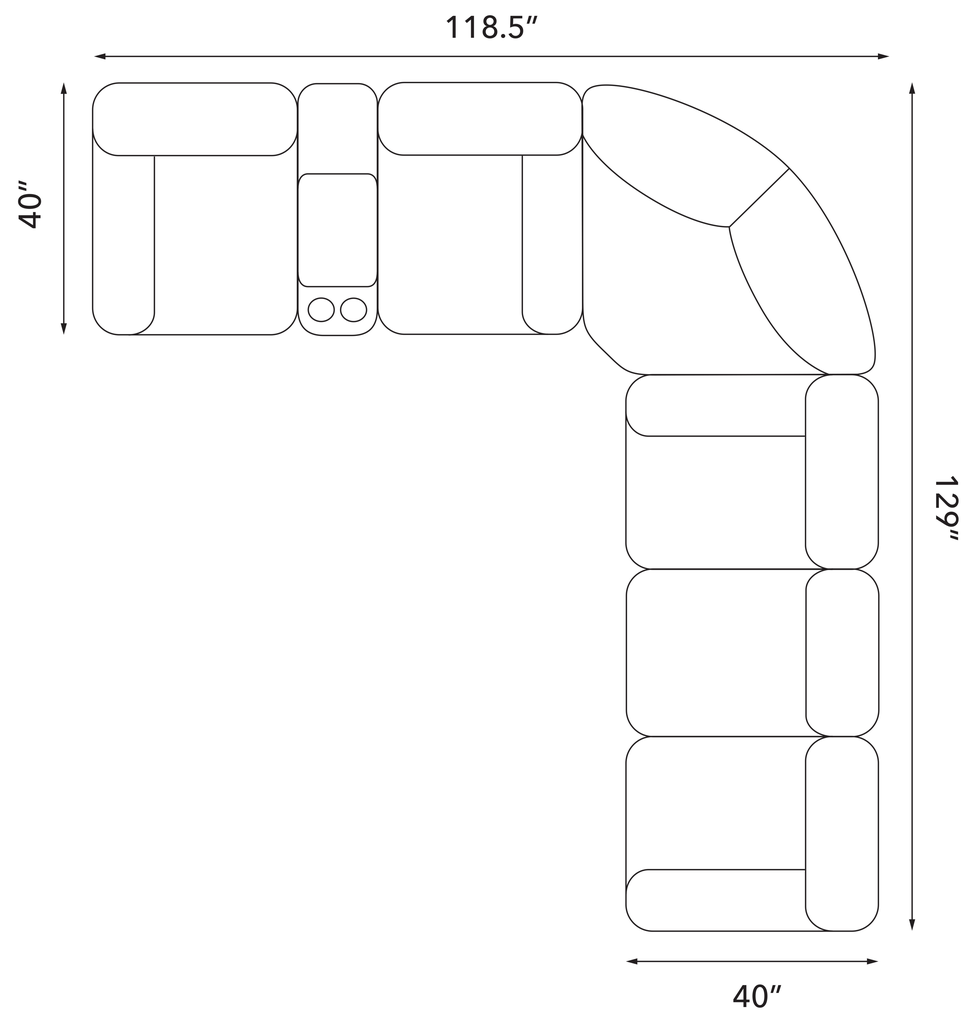

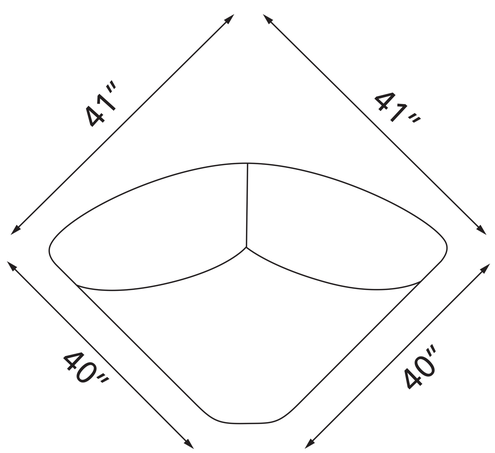

CY950WE
Wedge, Two-Tone Grey

STEVE SILVER
FURNITURE