DESIGN YOUR OWN SPACE

ASSISI GREY

DUAL-POWER RECLINING SECTIONAL

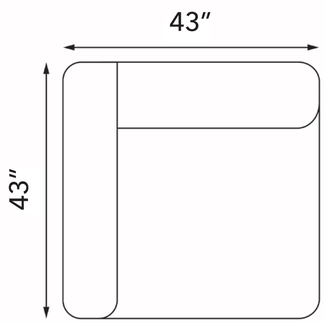

ASI950LAR
Left Arm Facing
Power Recliner, Grey

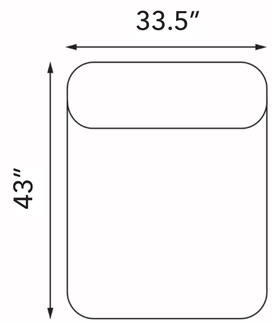

ASI950AC
Armless Chair, Grey

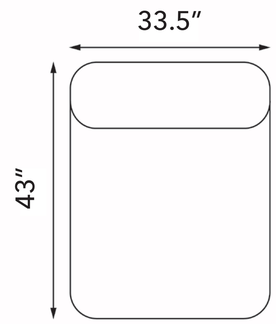

ASI950AR
Armless Power
Recliner, Grey

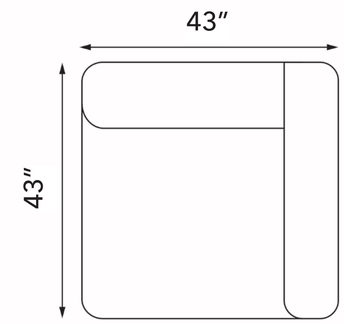

ASI950RAR
Right Arm Facing
Power Recliner, Grey

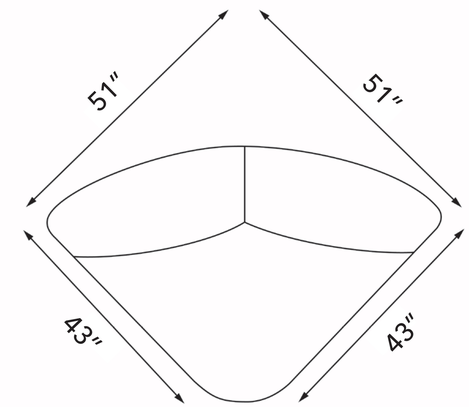

ASI950W
Wedge, Grey

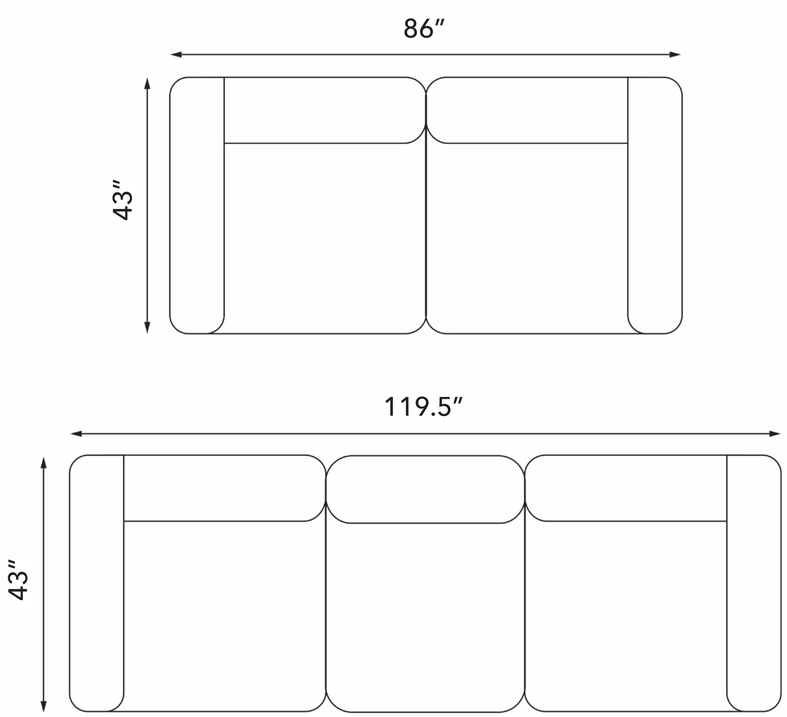

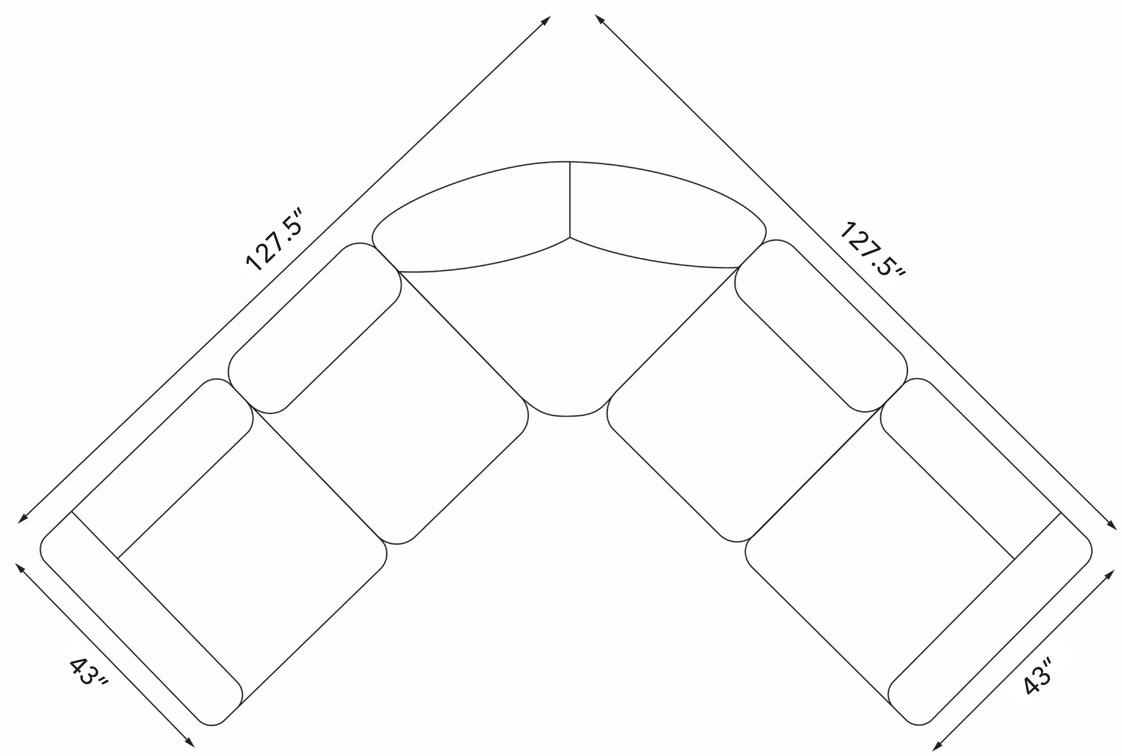

STEVE SILVER
FURNITURE