DESIGN YOUR OWN SPACE

ARIA SADDLE BROWN

DUAL-POWER RECLINING SECTIONAL

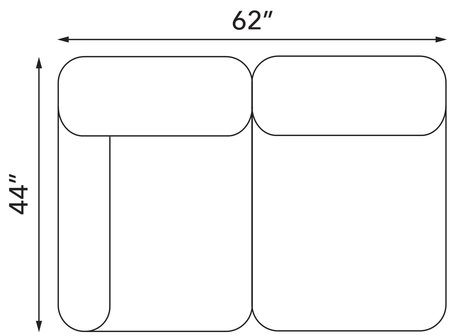

AA800LALBN
Left Arm Facing
Loveseat

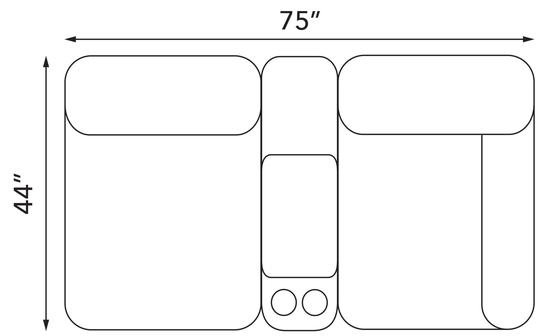

AA800RALBN
Right Arm Facing
Loveseat & Console

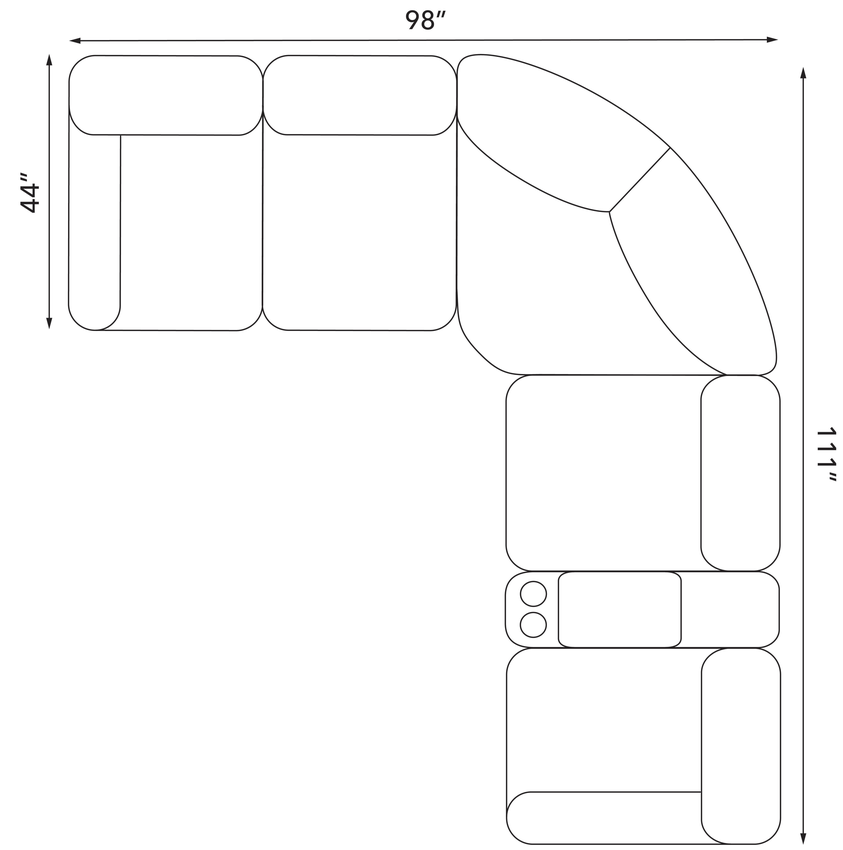

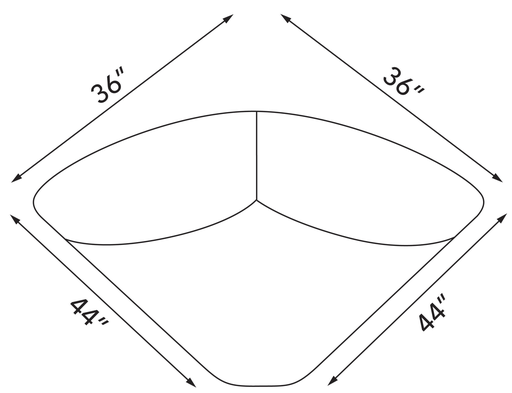

AA800WEBN
Wedge

Two Color Options

STEVE SILVER
FURNITURE